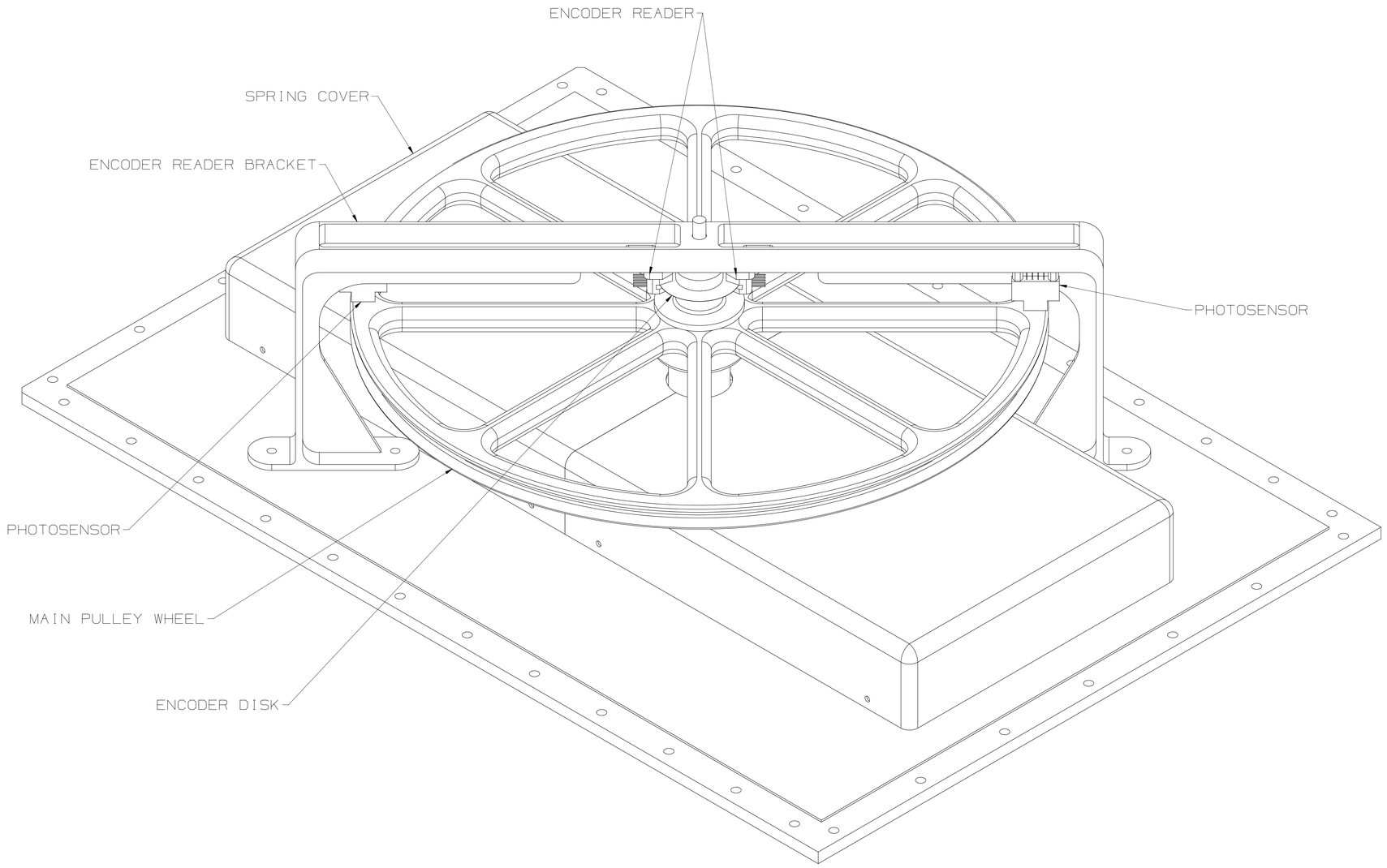

MAIN PULLEY WHEEL
ASSEMBLY